The LeadingEdge Racks and Room Treatment –

Adopting a systematic approach to system infrastructure – Part One

By Steve Dickinson

We live in complex times. Back in the good old days, you put the hifi into a cabinet, which kept it off the floor and stopped the cat from sleeping on it. If you didn't want a cabinet, you put it on a convenient table. All was well, provided nothing got broken during dusting. Then somebody noticed that, actually, what you stand this stuff on seems to make a difference. This observation has led to a wide variety of solutions, from the Bauhaus, via Heath Robinson, to the Cammell-Laird schools of design.

All have one stated purpose: to allow the equipment to work at its optimum with minimal disruption from unwanted interference. The fun starts when you try to get agreement on what form that interference takes, and how you deal with it. Me? I find it best to subscribe to the 'by their fruits, ye shall know them' school. If it works, be happy. It is, of course, always nice to have an inkling as to what might be going on.

LeadingEdge is a collaborative venture between Vertex AQ, whose isolation platforms and cabling have been reviewed in *Hi-Fi+* on several occasions, and Kaiser Acoustics, whose Kawero loudspeakers have been winning friends and influencing people across Europe for a while now.

Kaiser's expertise is in acoustic technology, and they also have some very high-class cabinet making facilities, as is clear from the superb fit and finish of the Kawero loudspeakers. Kaiser has been supplying acoustic treatment products to the architectural acoustics market for decades, with impressive installations that embrace everything from concert and conference halls down to lecture theatres and commercial premises. This is serious science and engineering we're talking here, so expertise in the field is well established. What's new is that, in combining its skill sets with Vertex AQ, the two are bringing them to the wider

domestic audio market, reaching beyond the loudspeakers into all aspects of the system environment; Kaiser delivers the room treatment and cosmetics, Vertex provides the support and signal isolation technology. Together they should add up to an interesting approach.

The LeadingEdge philosophy is that the principal offenders are vibration and electromagnetic noise. Vibration may be external - mostly created by the system in action; and internal - vibration of transformers and other stuff excited by the AC current, or mechanical movement of transport mechanisms, sub assemblies or components. External acoustic vibration can be structure-borne, commonly transmitted through ►

The rack itself incorporates several different technologies, intended to control vibration and reduce electromagnetic interference. An electromagnetic absorption layer is built into each platform level, together with various anti-vibration and acoustic control technologies. Much of the cleverness is, though, contained within the platform shelves themselves, working through the LeadingEdge couplers which form part of the system. Two cones are top and tailed with a rubber pad and O-ring (LeadingEdge describes these as 'decouplers'), while the third is a mechanical coupler, providing a single exit path for mechanical energy within the unit itself.

Each platform also conceals a complex labyrinth, consisting of numerous different-length paths, intended to dissipate vibrational energy of different frequencies. The platform's top-plate has two metal insert panels which couple, mechanically, to this labyrinth. The equipment is stood with the two decouplers resting on the wooden part of the top plate, and the coupler placed on one or other of the metal inserts, as convenient, so that vibration can pass down into the labyrinth below the surface. This suggests not all unwanted vibration is external, and too much isolation will prevent that vibration being removed effectively in the first place.

The platform also minimises the amount of external vibration that can influence the equipment, this reduction primarily managed by the feet fitted to each shelf. Known as Stop-Chocs, and originally developed in the automotive industry, the mesh blocks are used to reduce noise, vibration and harshness by securely, yet flexibly, attaching heavy components to the vehicle structure without transmitting vibration.

Finally, airborne vibration is dealt with acoustically. The underside of each platform incorporates the micro perforation technology used in the acoustic panels and similar, free-standing, side mini-panels can be placed alongside the equipment. These acoustic panels also contain EMI absorbing materials, to reduce electromagnetic interference. The aim is to sit the equipment in an environment that is as free as possible from external influences.

vibrational energy in the floor or walls, or air-borne: vibration set off by the movement of air in the room. Electromagnetic noise is mostly external, entering either via the cabling, or through the casework.

In all these various types of interference, the problem boils down to two issues: how to minimise the degree of interference entering the system, but more importantly, how to get rid of it once it's in there. This is where some other approaches fall down. If you focus on isolating the equipment, you may also prevent any interference that is already in those units finding an exit path; if you focus on grounding, you can make it easier for external, malign, mechanical forces to find a way in. The LeadingEdge racks attempt to cover both sides of this equation, and seemingly do so with considerable success, aided in no small part by the Acoustic Panels that make up the other significant part of the system solution.

The vast majority of acoustic solutions consider the problem in terms of pressure; sound is pressure waves, to be dealt with by varying degrees of absorption or reflection, strategically located about the room. But that ignores the fact that sound also has a velocity component; the particles in the air mass are actually physically in motion. LeadingEdge employs micro-perforation technology, a well-established technique in the architectural and aeronautical worlds, to handle energy peaks in the velocity domain – with astonishing results. But I'm getting ahead of myself…

You may not want to concern yourself with equipment support, in which case coffee-table or cabinet makers will be happy to take your call, but if you're persuaded, as we at Plus Towers are, that this stuff is important, then come with me, dear reader.

Essentially, there are two products in the LeadingEdge portfolio: a modular equipment support rack, and a range of acoustic panels in various shapes and sizes. Each works perfectly well by itself, but for full effect they should really be used together, the whole being (considerably) more than the sum of the parts, as I discovered during a very interesting day spent in RG's listening room, working our way up to a full-

blown LeadingEdge rack and acoustic panel system, while LeadingEdge's Steve Elford explained the technology and the thinking behind each element.

Most people will start with the rack, so that's what we did. Beginning with the equipment set up on a rather nice Quadraspire rack using the excellent new bamboo shelves, the system sounded tidy and enjoyable. No reason not to like it, certainly no criticisms of the rack, at the price. The system was an uncompromisingly high-end one, as befits the Gregory household, with electronics from Wadia, VTL and Jeff Rowland, playing into Kef Blades, all connected and powered by Nordost Odin. Frankly, though, given the cost of this system, at this point I'd not have been thinking it was money particularly well-spent. Moving across to the LeadingEdge rack, a whole new level of organisation was immediately apparent. The contrast was quite marked, suddenly the contributions being made by the old rack were clearly evident, being now largely absent. As we added the various different elements of the LeadingEdge system, all kinds of music just started making much more sense. Whether dense orchestral such as the Dvořák 9th Symphony, or fast, modern jazz from Roberto Fonseca, the individual musical elements became better sorted, arranged in the right time and place, making more sense of their contribution and portraying levels of musicianship that had, hitherto, been well-concealed.

An example: I took along one of my favourites, the Roberto Fonseca album Akokan. We spent some time using the track Lo Que Me Hace Vivir, which has a harmonic and rhythmic complexity reminiscent of Bill Evans. Partway into the track, it explodes with a rush of added energy and impact, the intensity of Fonseca's piano matched only by the speed and skill of the percussion. Except that it wasn't. At first, before we moved over to the LeadingEdge rack, the percussion was uncontrolled and almost random, with little or no connection to the music. It was like Animal from the Muppets being let loose, in one of his more manic moments, and the rest of the band doing their best to play the piece and keep up. Bit by bit, however, as we added the various different elements of LeadingEdge technology to the system, the magic began to happen. Suddenly, the percussion fitted into the music, and stopped being an unhelpful intrusion. Rhythmically and dynamically the various musical elements fell into place and it no longer sounded like an under-rehearsed band with an out-of-control drummer, instead becoming an ensemble of superb musicians, unquestionably on top of their game. Now, all the expensive hardware began to justify its asking price.

Dense orchestral music fared just as well. As we built up the various LeadingEdge elements, from racks to acoustic panels, the sense of an orchestra working against itself receded and we were left with a performance free of congestion, confusion, and spatial disarray, replaced with a ▶

convincing, stable and, above all, meaningful presentation of the music.

Encouraged by all this, I took away a smaller set, to get to grips with it in the familiar surroundings of my own listening room. Happily, the benefits seem to be remarkably consistent and the LeadingEdge stuff seems to be effective in systems big and small, in rooms palatial or poky. It's capable of scaling up, or down, as the situation requires. It's also possible to use the platform shelves by themselves, so entry to the LeadingEdge system doesn't have to start with an entire rack setup. Platforms can be free-standing on top of your existing supports or racks, or perhaps most interestingly of all, built into the sort of wall units that can hide entire systems.

Once you've heard the typical sonic contributions made by various different support materials, it is often not difficult to recognise them. Steel and glass supports sound different to wooden ones, and acrylic sounds different again. The striking thing about the LeadingEdge rack was the lack of this sonic signature. I'm used to the MusicWorks ReVo rack, which takes a rather left-field approach using only acrylic, and one of the things I like about it is that it seems to impose very little of itself. The consequence of that is that if I'm listening to a familiar system on a different rack, it's not difficult to hear the rack's contribution to the proceedings. Not so the LeadingEdge. The ReVo does this disappearing act, partly, by not really being there all that much, anyway. The LeadingEdge takes a more considered, more complete and ultimately more successful approach, achieving its unobtrusiveness through clever and thoughtful engineering. Unfortunately that cleverness means there are too many considerations to cover in a single review, so I need to leave things here until next issue, where I'll be examining the LeadingEdge range in greater detail. For now, let me just say that these products delivered such a fundamental improvement in system performance, in more than one case and of a nature it would be hard to achieve by other means, that they've forced me to reassess system priorities and relative values. These products are not cheap (although their modular nature does help in that respect) but, if more music means better value, LeadingEdge is a very valuable proposition.

"It's capable of scaling up, or down, as the situation requires. It's also possible to use the platform shelves by themselves, so entry to the LeadingEdge system doesn't have to start with an entire rack setup. Platforms can be free-standing on top of your existing racks... or built into the sort of wall units that can hide entire systems."

Adopting a systematic approach to system infrastructure – Part Two

Having got the various LeadingEdge components into my own system and enjoyed their impact en masse, it was time to start thinking about their individual contributions. I experimented with removing, and refitting various of the bits & bobs which make up the entire setup. Remove the LeadingEdge couplers (between each platform and the electronics) and music lost some of the key sense of timing and rhythm, and dynamics felt a little defused and deflated. Winding the Stop-Choc feet in so the platform sat in contact with the support frame was, if anything, even more significant. Now the timing made no sense at all. The attack and fundamental on bass notes were oddly disconnected from the harmonics and the decay parts, a strange sense of dislocation, almost as thought they were two separate instruments. A strange and most unwelcome effect. Not surprisingly, the piece now failed to get or hold my attention, it had no sense of purpose or interest.

Now take out the LeadingEdge couplers and everything makes somewhat less sense. Percussion lacks precision, and the playing of instruments is less subtly and skilfully wrought, with little or no sense of pattern. The overall effect is to make you wonder how well the musicians know this piece. Winding the Stop-Chocs in to their fullest extent degrades the sense of pitch and decay to notes quite significantly. Notes simply die, almost as if the sound box is half full of water. The pitch is also less well-defined. Bring the Stop Chocs back into play, and replace the LeadingEdge couplers, and the instruments are better defined, the placement of notes is more deft, the musicians are listening, and responding, to each other rather than simply getting through their part.

The Stop-Chocs seem to tighten everything up, while simultaneously opening everything wide for inspection. The music acquires a distinct sense of focus, even deliberately distorted guitar retains more of the shape of the note. Similarly, percussion has more point and purpose, it stops being mere background rhythm and makes a clear and positive contribution to the proceedings. The LeadingEdge isolators and coupler work in a similar way, but this time it is often the dynamics which are the most obvious beneficiaries. These are, in many ways, complimentary effects and the benefits of both, used in combination, transcend their individual contributions; on reinstalling the Stop-Chocs and the LeadingEdge couplers, order was miraculously, and gratifyingly, restored.

The mini-panel 'side cheeks' simply sit alongside the equipment, on the support frame. They are intended to further isolate, electromagnetically and acoustically, the area the equipment sits in. Interestingly, they don't need loud or bombastic music to make their presence felt. Remove the mini-panels and music becomes fairly unremarkable. With the side panels replaced, it regains a level of interest and intrigue that is both more emphatic, and more engaging, you are suddenly much more interested in where a piece of music is going.

Schubert's 'der Doppelgänger' is a deceptively simple piece, but properly rendered it conveys a sense of threat, even menace, which can't be ignored. Without the mini-panels in place, it loses some of the sense of presence, of real musicians working together in a performance space, and it is that sense ▶

of intimacy, of sharing the moment, which creates much of the drama and tension. Panel-less, the drama dissolves into histrionics, shouting and gurning. Put the panels back in place and we're back in a world of mystery and intrigue. Larger scale choral music fares equally well, and they don't get much larger in scale than the 'Judex Crederis' from Berlioz' Te Deum. With the side panels in place, the vocal is emphatic, without sounding forced. Without, it's just loud and shouty. If I had to sum up the side panels' contribution succinctly, I'd say they create a little oasis of calm for the equipment to work in, so that any drama is in the music, not just an acoustic problem being re-radiated through the system.

It's not just that it makes sense of the music, and resolves meaning where once there was chaos, but it also draws out the beauty. Instruments are rich and sonorous, but not overdone or blowsy; there is a natural warmth and grainlessness to the presentation. Just once in a while, I found myself wanting the odd bit of grit in the oyster and, just perhaps, on those occasions I'd trade the last ounce of sophistication for the last little gobbet of rough and ready, down and dirty, foot-stomping, good-time music-making, but mostly, the LeadingEdge rack did everything I asked of it, and plenty I didn't even know I wanted, until I had it.

The second element in the LeadingEdge approach deals with room acoustics but, again, not in an entirely conventional way. The LeadingEdge panels, available in various different sizes and shapes house a clever cellular matrix of absorbing material. Their purpose is not so much to manage room reflections and resonances, as to control the movement of the air mass within the room.

In my small room, which is roughly square, I opted to try just a single panel, not wanting to overload things acoustically or visually. The panel worked most effectively when placed at one end, between and behind the loudspeakers. When I introduced it at first, I placed it at the side, in the conventional 'first reflection' position between me and the loudspeakers. This had a noticeable, but not profound, effect, and plan 'B', down the end of the room was much, much more successful, the panel damping the motion of the air mass more effectively in that position. Also, note that this central/boundary position is where the air velocity will be highest, helping to explain just why it is so effective.

What the panels do with music is interesting and significant. It boils down to an improvement in the way the music hangs together. The effect may vary, from piece to piece, but it does seem to be associated with timing, at a fundamental level. Not so much the rhythm and metre of the music, but whether the various elements arrive at the right time, and in the right order. This isn't room-dependent, it was the same in my room as it was in RG's.

The panels create a stronger sense of music as a collaborative effort - a sense of players working together, not merely a collection of related sounds. Each component part has its own space and time, in which to make its contribution. The strident brass opening of Sibelius' Finlandia was instructive. Rather than the usual wall of sound, the impression was of several instruments playing en masse, and the timpani rolls were more clearly defined: the strike and the reverberation gained shape and location. This acoustic control isn't just about loud, bombastic stuff either, Fauré's Elegie is a simple cello solo with piano accompaniment. The opening figure is played through, then repeated, but more quietly. Without the panel, the difference is one of mere

volume, with the panel, it became a question of intensity. Again, it's a question of communication through the music, by the musicians.

The LeadingEdge approach is interesting, effective, and hard to achieve by other means. Modest boxes can outperform even hugely more expensive alternatives, and the expensive stuff just gets better still. If that doesn't represent fair value. It also has the undeniable benefit of being attractively finished with a range of options including wood veneers or high-gloss lacquer, which bodes well for domestic acceptability.

The modular approach means you can build it up as funds permit; starting with a platform on top of existing supports is probably an easier entry point for many, which is helpful because it's an indisputably costly solution. For once, however, it's not that difficult to see where your money has been spent, and the results clearly justify the expense. I can't think of any hardware upgrade that would provide a similar increase in performance for the price, indeed, the sort of improvements we're talking about here simply don't come from the hardware itself. LeadingEdge offer a comprehensive, effective and complex solution – and why not? After all, we live in complex times.

LeadingEdge describes the panels' function as 'velocity choking'. In effect, the mass of air in the listening room is excited into motion by the loudspeakers. It's not simply a question of sound waves propagating, and reflecting off hard surfaces, but the volume of air sloshing around.

If you think about the propagation of sound, it consists of pressure waves moving through the air. It isn't therefore much of a leap to realise that, if the mass of air these pressure waves are moving through is itself moving back and forth, then this will affect the timing of the arrival of these pressure waves at the listening point. If the gross motion of the air can be damped in this way, then the motion from the pressure waves can work as intended.

The benefits of the LeadingEdge panels are not confined to music, either. When introduced, they immediately alter the acoustic qualities of the room, even for normal conversation.

UK RETAIL PRICE LIST

Rack System

Support Platform (inc. Coupler/Decouplers): £1300
Rack base: £850
Rack upright with shelf frame (240, 310, 380mm): £900 per level
3 Shelf Rack System (616 x 410 x 310mm): from £6700 depending on finish
3 Shelf Rack System Full Solution: from £10,300 depending on finish (including top cover and mini panels)

Acoustic Panels

Single-sided (from 600mm x 800mm): from £1220
Double-sided with feet (from 600mm x 800mm): from £1520 (Panels available in white, light oak or cherry as standard and three different heights – 800, 1100 and 1600mm. Double sided panels need at least eight inches of air behind them. They are ideal for free standing or hanging from ceilings. Specific sizes and (many, many) finishes are available to special order

Further Information

Tel: +44 (0)1597 825993. URL: leadingedge-audio.com
Tel: +44 (0)24 7722 0650. URL: www.kogaudio.com (Acoustic Panels Only)
Email: answers@leadingedge-audio.com

LeadingEdge Modular Rack System –

Building the LeadingEdge Rack System from the ground up

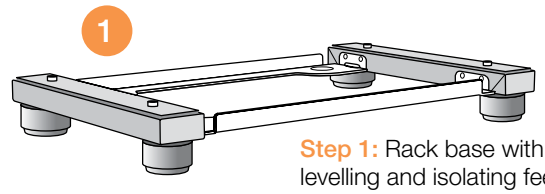

Step 1: Rack base with levelling and isolating feet.

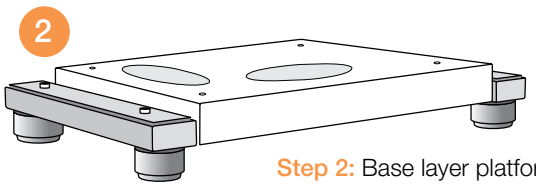

Step 2: Base layer platform (or power platform incorporating AC distribution for system).

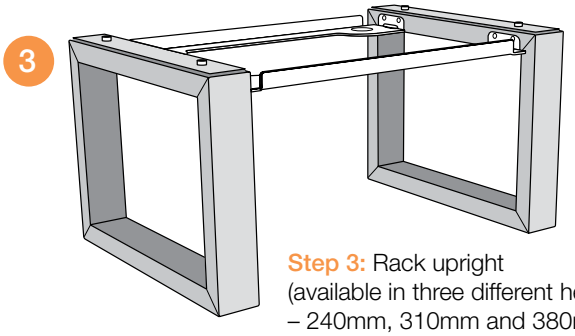

Step 3: Rack upright (available in three different heights – 240mm, 310mm and 380mm).

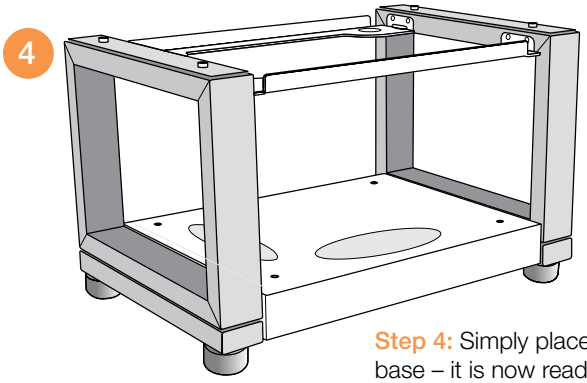

Step 4: Simply place upright on base – it is now ready to receive the second level platform, which can be independently levelled.

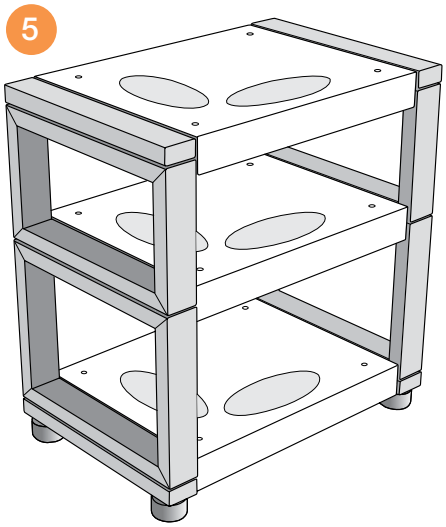

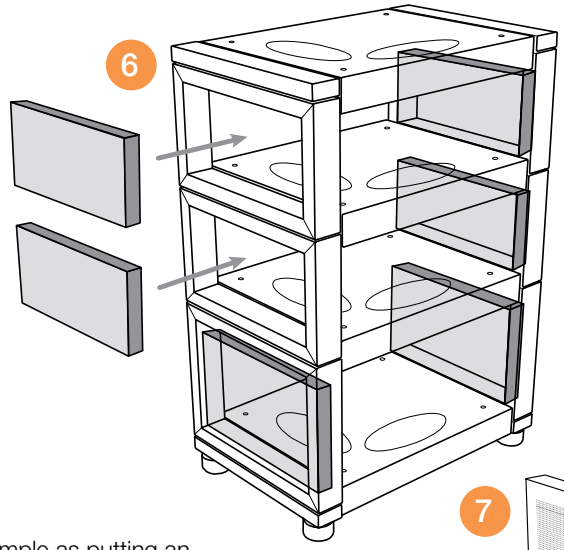

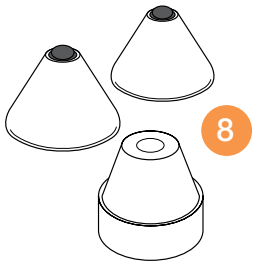

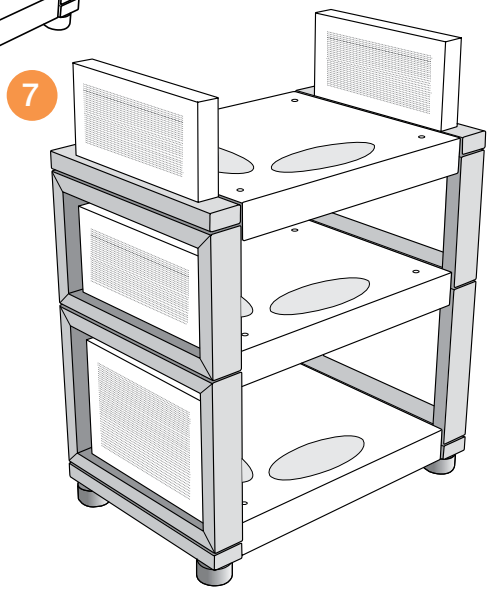

Step 5: Adding additional levels is as simple as putting an extra upright and platform in place. Finally, place the shoulder caps on the exposed uprights.

Step 6: For optimum performance mini panels (offering acoustic control and RFI absorption) can be placed between the uprights.

Step 7: The full system includes addtional mini panels either side of the top shelf.

Step 8: Place equipment in the rack supported on LeadingEdge couplers, with precise placement as described on web: **LeadingEdge-audio.com**